Identifying Faults: A Closed-loop Perspective

ERSNI 2021

Koen Classens, W.P.M.H. (Maurice) Heemels, Tom Oomen

K.H.J.Classens@tue.nl

Industrial Challenge [1]

Problem:
- Downtime of production equipment → Very expensive!

Motivates demand for:
- Fault detection and Isolation (FDI) → Similarities to SysID
- Fault tolerant control
- Predictive maintenance

Mechatronics:
- Closed loop
- Multivariate

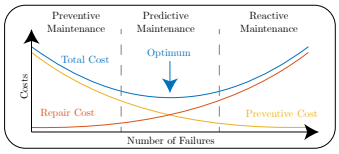

Fault Diagnosis via Residual Generation [2]

Goal: Design $Q := \begin{bmatrix} Q_y & Q_u \end{bmatrix}$ s.t.
- setpoint decoupling $(G_{\varepsilon r} = 0)$
- fault sensitivity $(G_{\varepsilon f} \neq 0)$
- disturbance attenuation $(G_{\varepsilon d} \approx 0)$

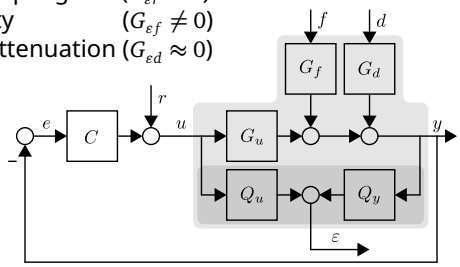

Specifically, maximize performance measure $\frac{\beta}{\gamma}$ through

$$\beta = \max_{Q} \left\{ \|G_{\varepsilon f}\|_{\infty-} \,\middle|\, \|G_{\varepsilon d}\|_{\infty} \leq \gamma \right\}$$

- Often claimed that feedback controllers do *not* affect FDI system design, see, e.g., [2], [3]
- Hence, the *open-loop* problem ( ) equals the *closed-loop* problem? → Recall closed-loop identification problem?

Closed-loop Noise perspective

For identification, caution is required! E.g.,
- Spectral analysis $\widehat{G}_u(e^{j\omega}) = \frac{\widehat{\Phi}_{yu}(\omega)}{\widehat{\Phi}_{uu}(\omega)} = \frac{G_u(e^{j\omega})\Phi_{rr}(\omega) - C^H(e^{j\omega})\Phi_{vv}(\omega)}{\Phi_{rr}(\omega) + |C(e^{j\omega})|^2 \Phi_{vv}(\omega)}$ can result in bias due to correlation v and u → SysID solutions known [4] [5]

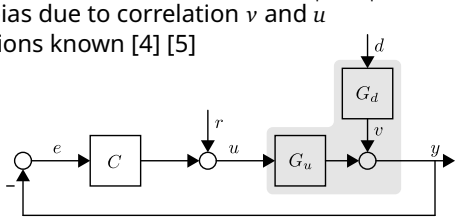

- Knowing whether controllers are in the loop is *crucial*!

Take home message 1: For FDI system design, indeed,
- residual generation problem is invariant to controller C
- **Theorem:** open-loop problem ( ) with $G_{\varepsilon u} = 0$ is equivalent to closed-loop problem with $G_{\varepsilon r} = 0$.
  I.e., the same filter Q results, see [6] for details, confirming the implicit statements in [2], [3]

Closed-loop MIMO perspective

In addition, from a MIMO perspective, caution is required!
- Naive indirect identification approach, e.g., $\widehat{G}_u(e^{j\omega}) = \frac{\widehat{G_u S}(e^{j\omega})}{\widehat{S}(e^{j\omega})}$ gives an estimate of $G^{\text{eq}}_{u,11} := G_{u,11} - \frac{G_{u,12}C_{22}G_{u,21}}{1 + C_{22}G_{u,22}}$ and results in bias due to cross-coupling → Matrix product for bias-free full plant, i.e., $\widehat{G}_u(e^{j\omega}) = \widehat{G_u S}(e^{j\omega})\widehat{S}(e^{j\omega})^{-1}$
- Bias in estimation propagates to FDI design, severely compromising resulting filter!

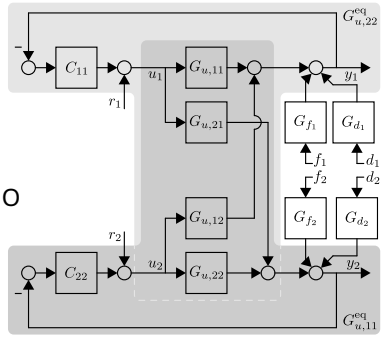

Take home message 2:
Two design options:
- Identify complete MIMO plant (if possible) and MIMO Q → gives C invariance
- Identify equivalent plant to design Q → depends on C (e.g., if limited i/o)

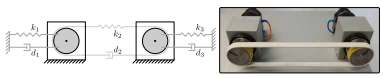

results in [6]

Discussion & Future Work

- Close link between SysID and fault identification → What can we learn?
- System reconfiguration, e.g., actuator force redistribution to counteract fault
- Predictive capability

References

[1] K. Classens, W. P. M. H. Heemels, and T. Oomen, "Digital Twins in Mechatronics: From Model-based Control to Predictive Maintenance," in *2021 IEEE International Conference on Digital Twins and Parallel Intelligence*, Beijing, China, 2021.
[2] A. Varga, *Solving Fault Diagnosis Problems*. Springer International Publishing, 2017.
[3] S. X. Ding, *Model-Based Fault Diagnosis Techniques: Design Schemes, Algorithms, and Tools*. Berlin: Springer, 2008, 473 pp.
[4] T. Söderström and P. Stoica, *System Identification*. Prentice Hall, 2001.
[5] P. Van den Hof, "Closed-loop issues in system identification," *Annual Reviews in Control*, vol. 22, 1, 1998.
[6] K. Classens, W. P. M. H. Heemels, and T. Oomen, "Closed-loop Aspects in MIMO Fault Diagnosis with Application to Precision Mechatronics," in *2021 American Control Conference (ACC)*, New Orleans, Louisiana, USA, 2021, pp. 1752–1757.